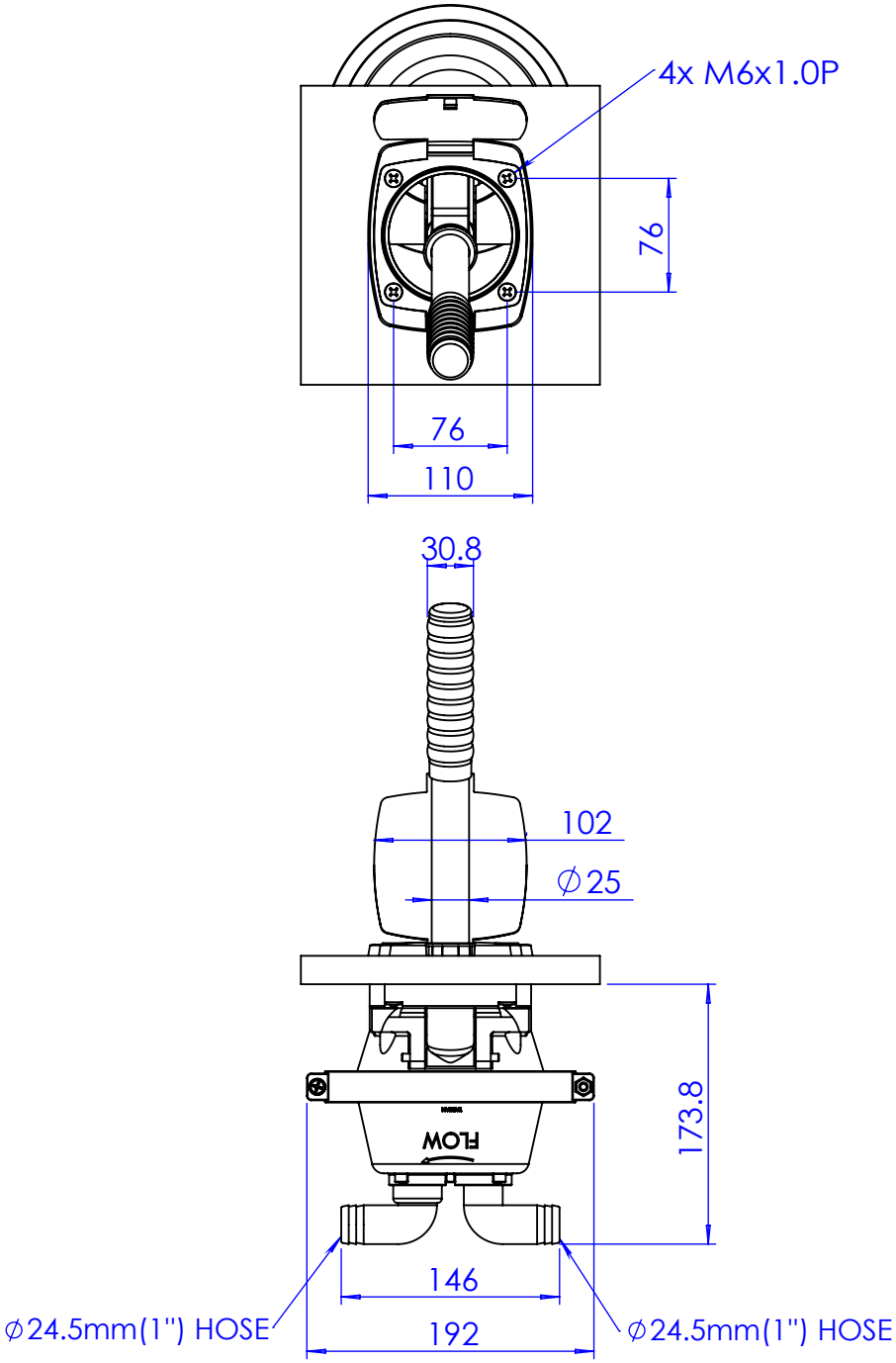
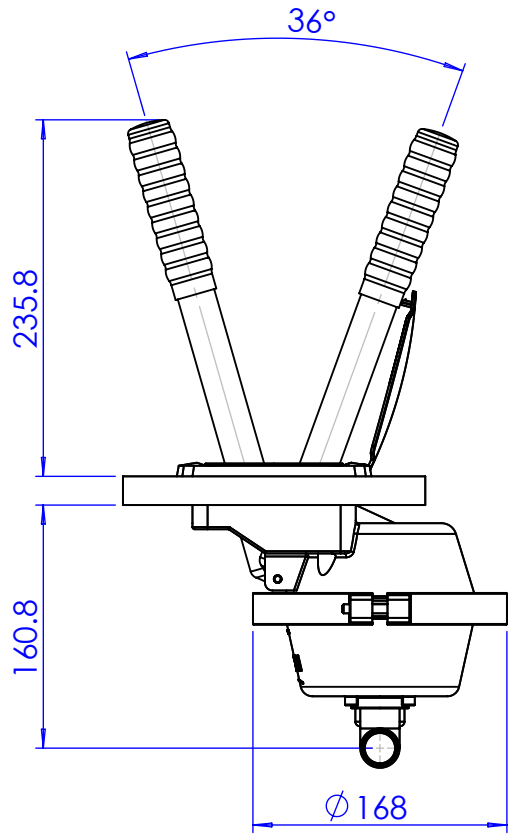
22 litters per 30 strokes